BOISE STATE UNIVERSITY
COLLEGE OF ENGINEERING
Department of Civil Engineering

MITIGATING EXPANSIVE SOIL SWELLING USING GEOCELLS: A CASE STUDY

Bhaskar Chittoori, Ph.D., P.E.

Chair and Associate Professor
Department of Civil Engineering
Boise State University

Email: bhaskarchittoori@boisestate.edu

Arizona Pavement and Materials Conference 2023

Arizona State University

OUTLINE

- Overview of the problem
- Research phases
  - Phase 1 study – Scope and recommendations
    - Laboratory work
  - Phase 2 study – Scope and recommendations
    - Numerical modeling
- Summary

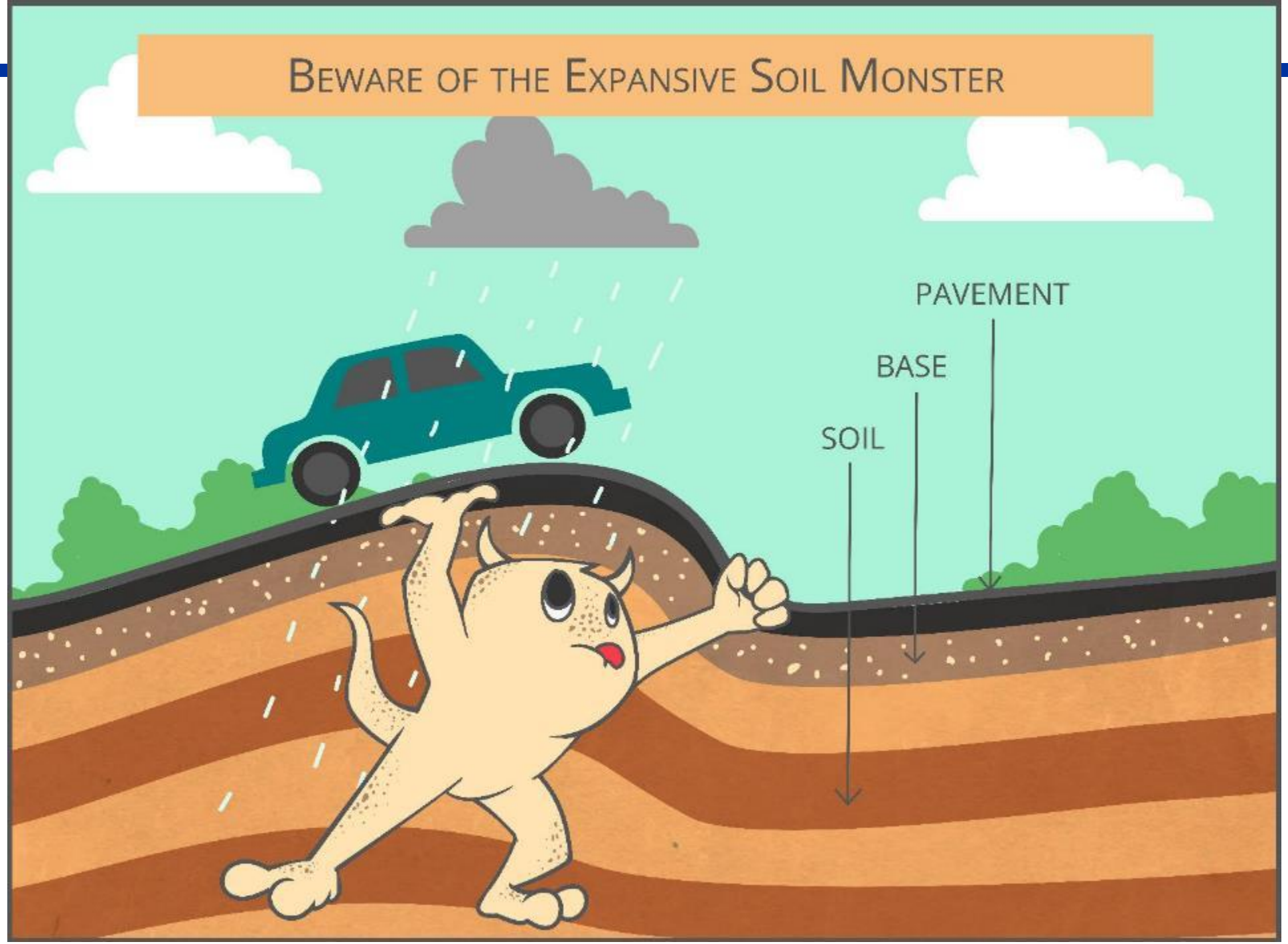
BEWARE OF THE EXPANSIVE SOIL MONSTER
PAVEMENT
BASE
SOIL

AERIAL MAP OF THE LOCATION (SOURCE: GOOGLE MAPS)

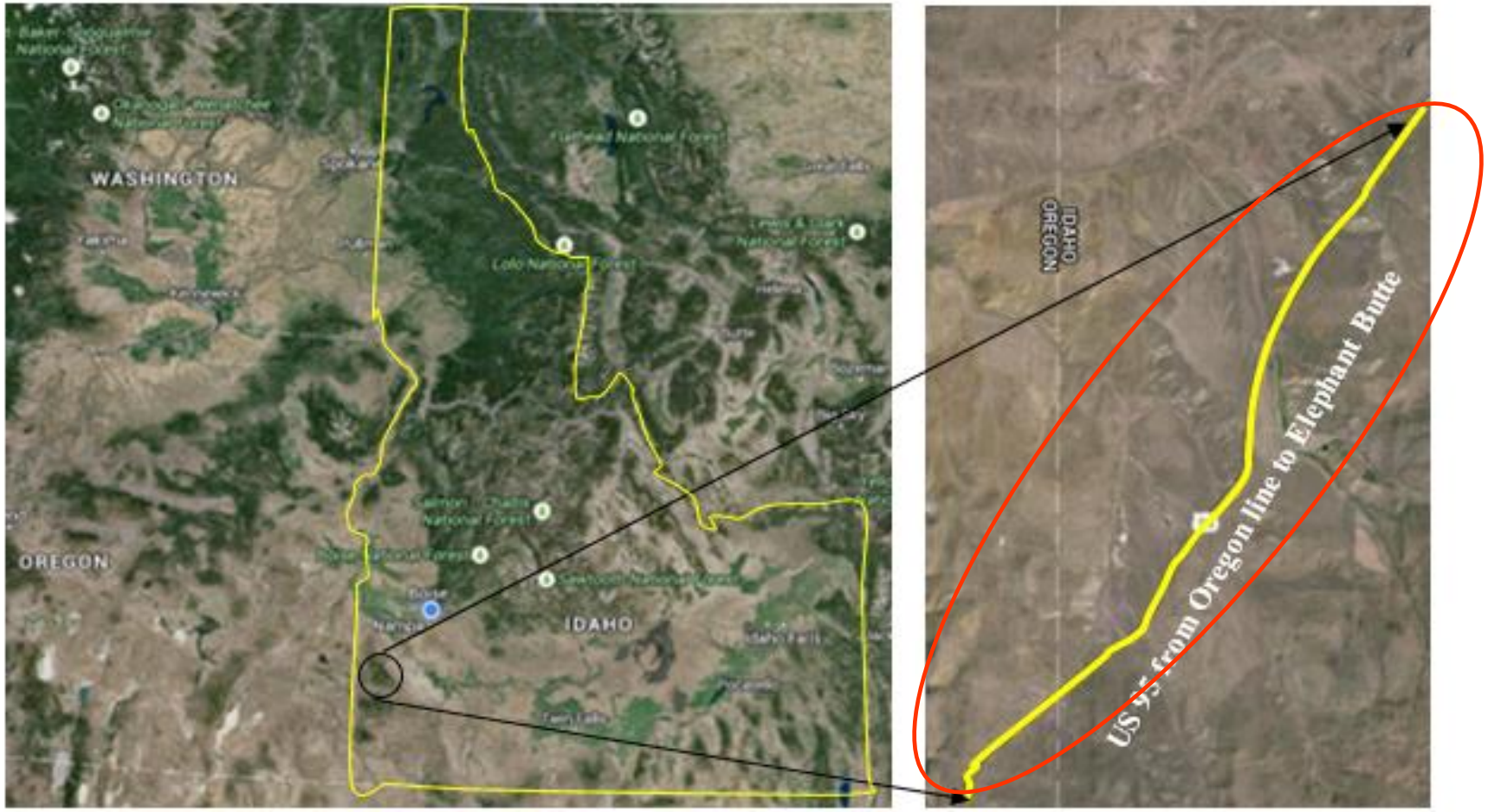

CONSTRUCTION HISTORY

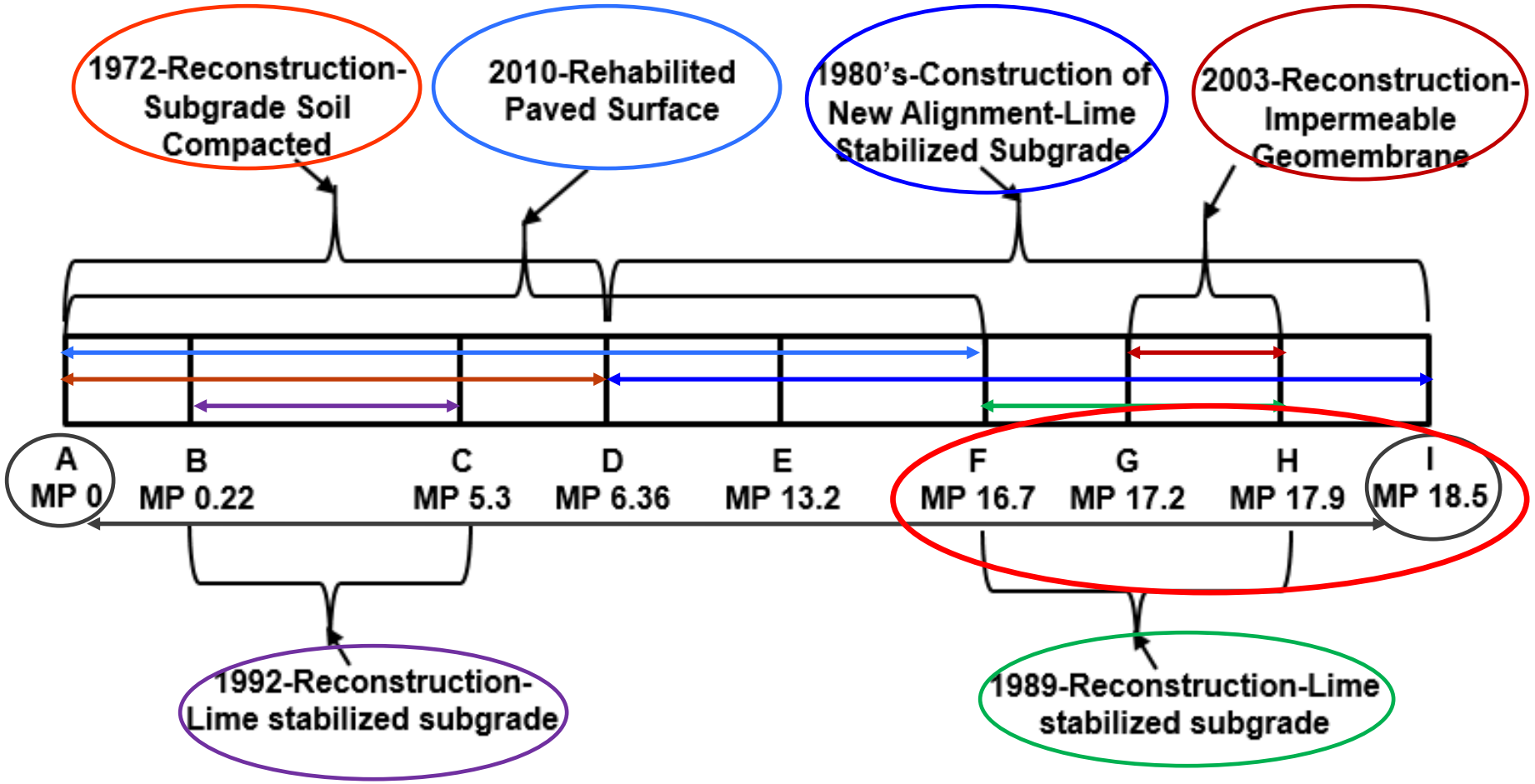

CONTINUED DISTRESS

- Problematic sections – MP 16.3 to MP 17.8

SOIL PROFILES, PVR AND SWELL PRESSURES

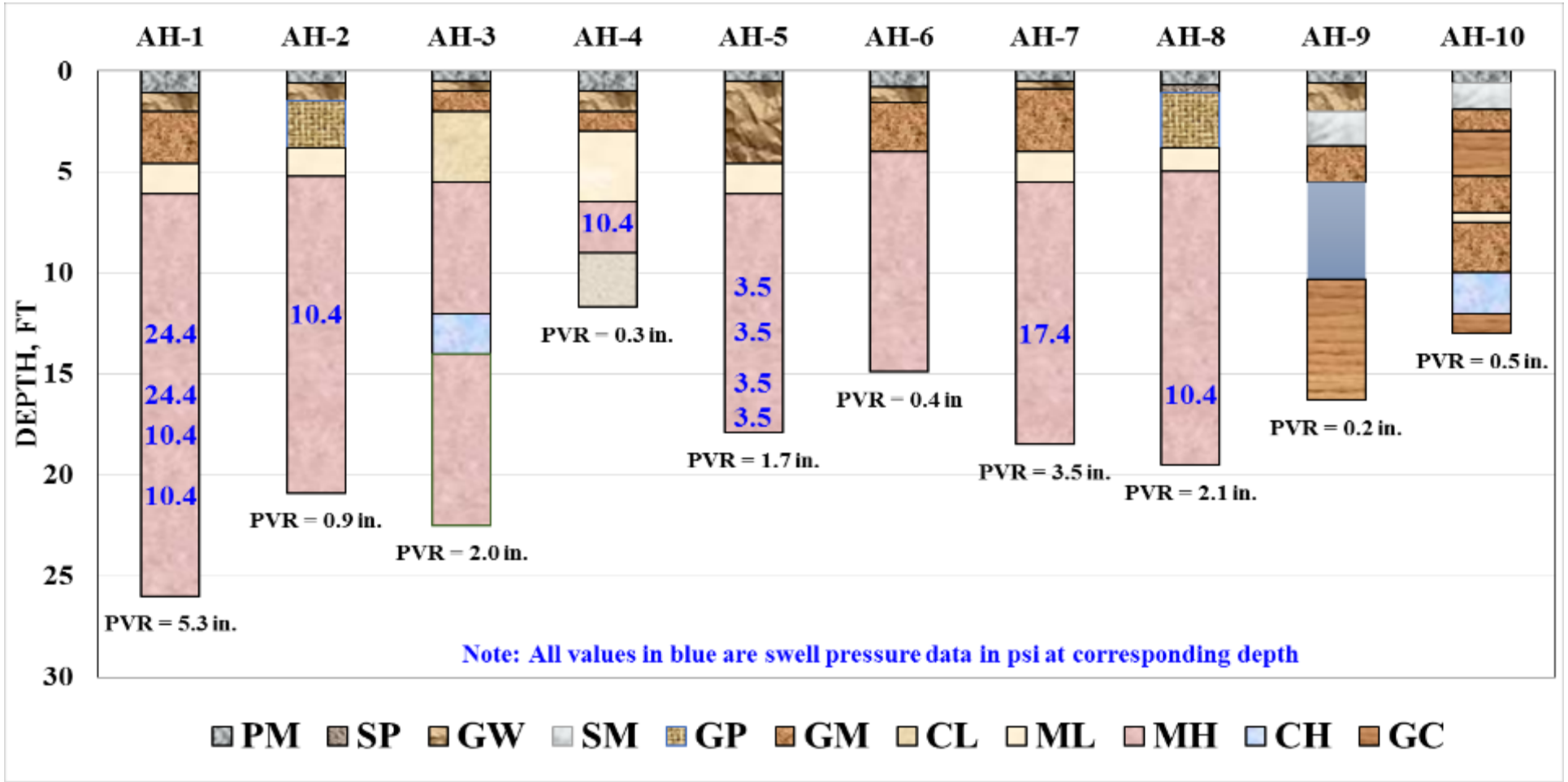

CONCLUSIONS BASED ON PHASE I FINDINGS

- Although the clay layers were found to be highly expansive, they are often more than 6 ft. below the pavement surface
- Shallow Lime/Cement stabilization (often limited to less than 3 ft.) will not address the swelling potential of the clay
- Mechanical stabilization is critical to "absorbing" and "dissipating" the differential movement from underlying soil layers

RECOMMENDATIONS FROM PHASE 1 STUDY

- Numerical analysis of alternatives
  - Model various combinations of alternatives
  - Calibrate the model using test data obtained from Phase 1 of the study
  - Run the calibrated model incorporating design alternatives
  - Observe response and recommend a test section for field implementation

PHASE 2 – DESIGN ALTERNATIVE - I

- Hybrid Geosynthetic – Geotextile and Geogrid
  - 32”-thick section
  - 2 geogrid layers wrapped in geotextile
  - Filled with select aggregate
  - Design optimized using numerical analysis

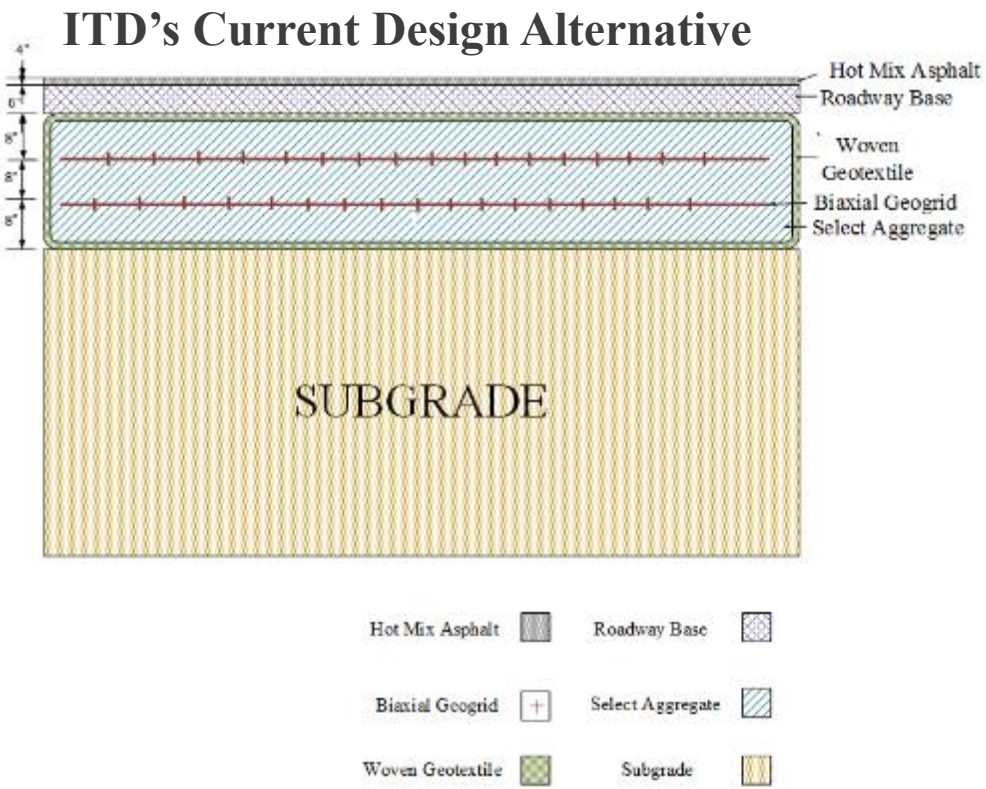

PHASE 2 – DESIGN ALTERNATIVE - 2

- Hybrid Geosynthetic – Geocell and Geogrid
  - 26”-thick section
  - 2 layers of 8” geocells
  - 1 layer of geogrid layer
  - Design optimized through numerical analysis

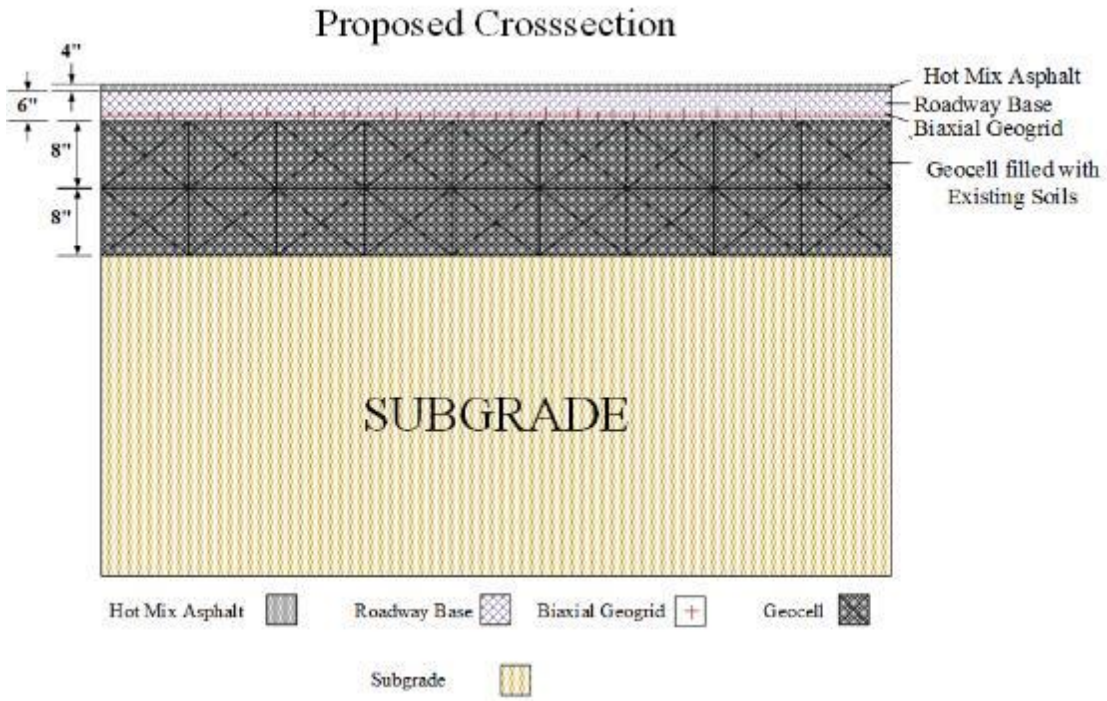

MATERIAL PROPERTIES USED FOR NUMERICAL MODELING

Properties	HMA	Base	Lime Stabilized Soil	Expansive Subgrade
Mass Density, ρ lb/in^3 (kg/m^3)	0.086 (2390)	0.0794 (2200)	0.036 (1020)	0.036 (1020)
Elastic Modulus, E, ksi (MPa)	399.7 (2756)	43.5 (300)	29 (200)	2.12 (14.6)
Poisson's Ratio, ν	0.3	0.35	0.35	0.4
Internal Angle of Friction, ϕ	-	40	25	10
Angle of Dilation, ψ	-	13	8	3
Cohesion, c' psi (kPa)	-	0.29 (2)	43.5 (300)	10.9 (75)

This data is generic for each material type and obtained from various literature sources (Not tested)

SOIL PARAMETERS USED TO MODEL EXPANSIVE BEHAVIOR

Soil Type	Moisture Swelling		Sorption		Permeability k (ft/s)	Initial Void Ratio, e
	Strain	Saturation (%)	Pore Pressure ksi (MPa)	Saturation (%)		
AH-11	0	9	-14.5 (-100.2)	7	3.3×10^{-08}	1.51
	0.14	54	-4.66 (-32.1)	21		
	0.22	63	-3.09 (-21.3)	41		
	0.27	69	-1.46 (-10.1)	52		
	0.31	74	-1.24 (-8.6)	57		
	0.33	78	-0.89 (-6.15)	60		
	0.34	83	-0.63 (-4.3)	64		
	0.37	93	-0.27 (-1.9)	71		
	0.4	100	-0.11 (-0.8)	88		
	-	-	0	100		

Moisture Swelling and Sorption: Experimentally determined
Permeability: Assumed generic value for expansive soils
Initial Void Ratio: Maximum Dry Unit Weight

SOIL PARAMETERS USED TO MODEL EXPANSIVE BEHAVIOR

Soil Type	Moisture Swelling		Sorption		Permeability k (ft/s)	Initial Void Ratio, e_0
	Strain	Saturation (%)	Pore Pressure ksi (MPa)	Saturation (%)		
AH-12	0	2	-18.8 (-129.67)	9	3.3×10^{-08}	1.43
	0.20	56	-9.85(-67.9)	18		
	0.25	65	-6.48 (-44.7)	27		
	0.29	69	-1.62 (-11.2)	35		
	0.32	74	-0.55 (-3.8)	44		
	0.34	78	-0.25 (-1.7)	53		
	-	-	-0.12 (- 0.8)	62		
	-	-	-0.06 (-0.4)	71		
	-	-	-0.04 (-0.3)	88		
	-	-	0	100		

Moisture Swelling and Sorption: Experimentally determined
Permeability: Assumed generic value for expansive soils
Initial Void Ratio: Maximum Dry Unit Weight

MODEL PAVEMENT SECTION USED FOR COMPARING DIFFERENT DESIGN ALTERNATIVES

- Section Dimensions: 50 ft. X 50 ft. (approximately one hour of simulation time per model)
- Material properties and boundary conditions remain same as control section
- Water source provided at the center of the section

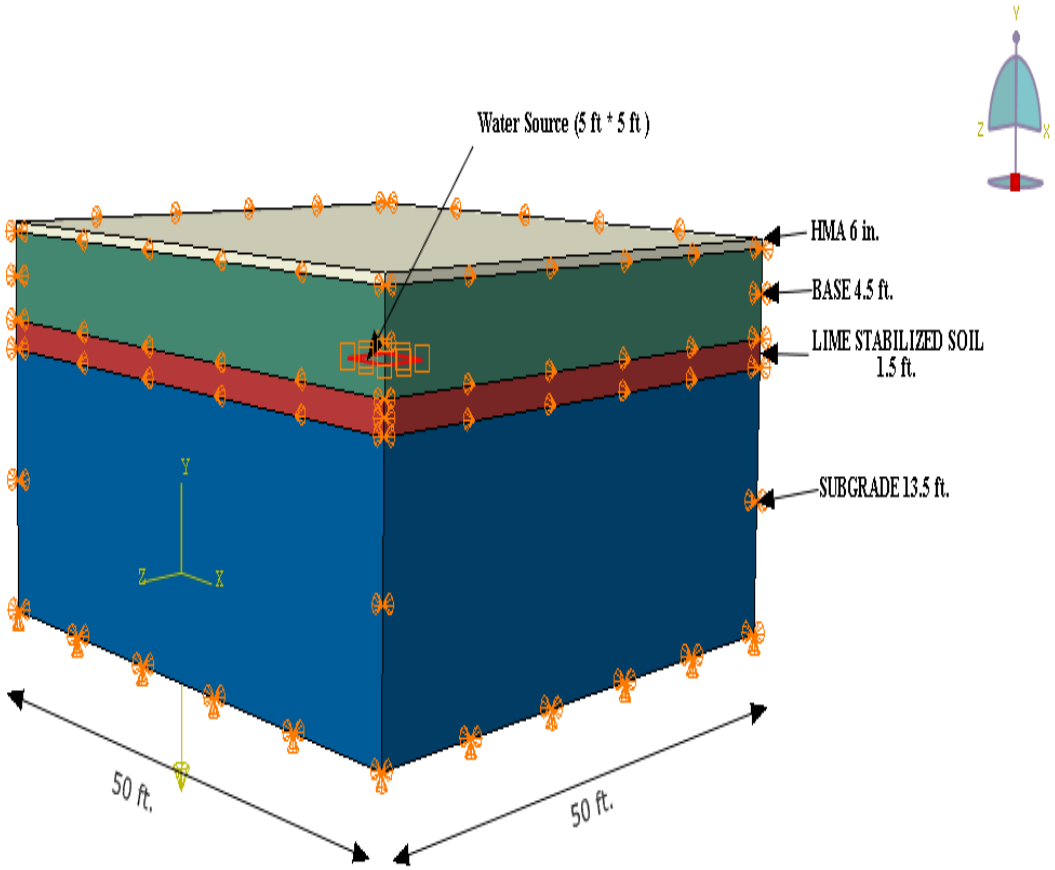

CONTROL SECTIONS

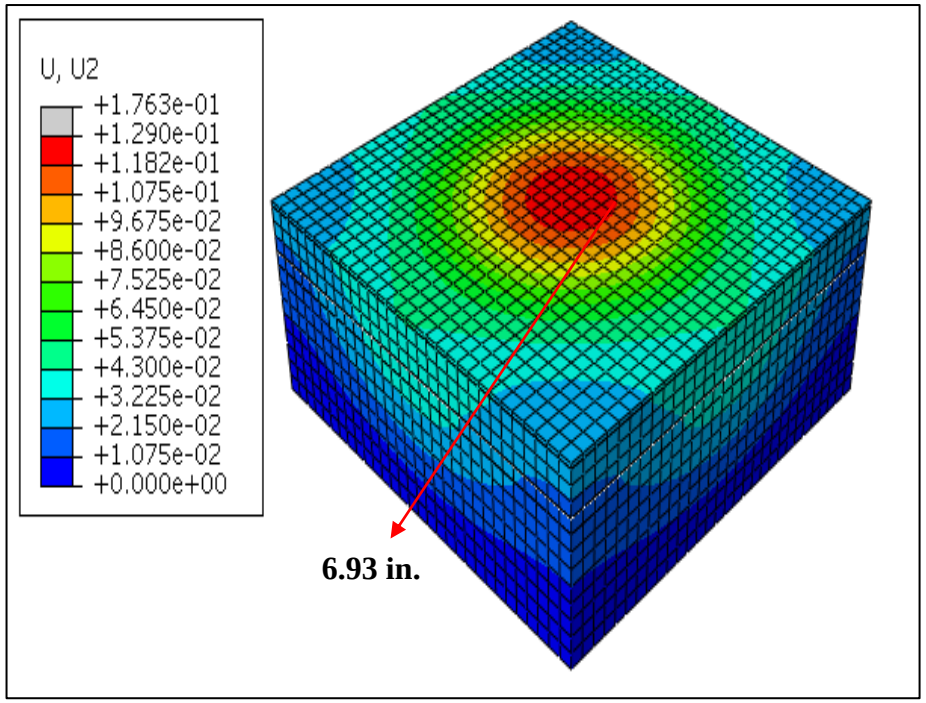

Section 1
AH-11

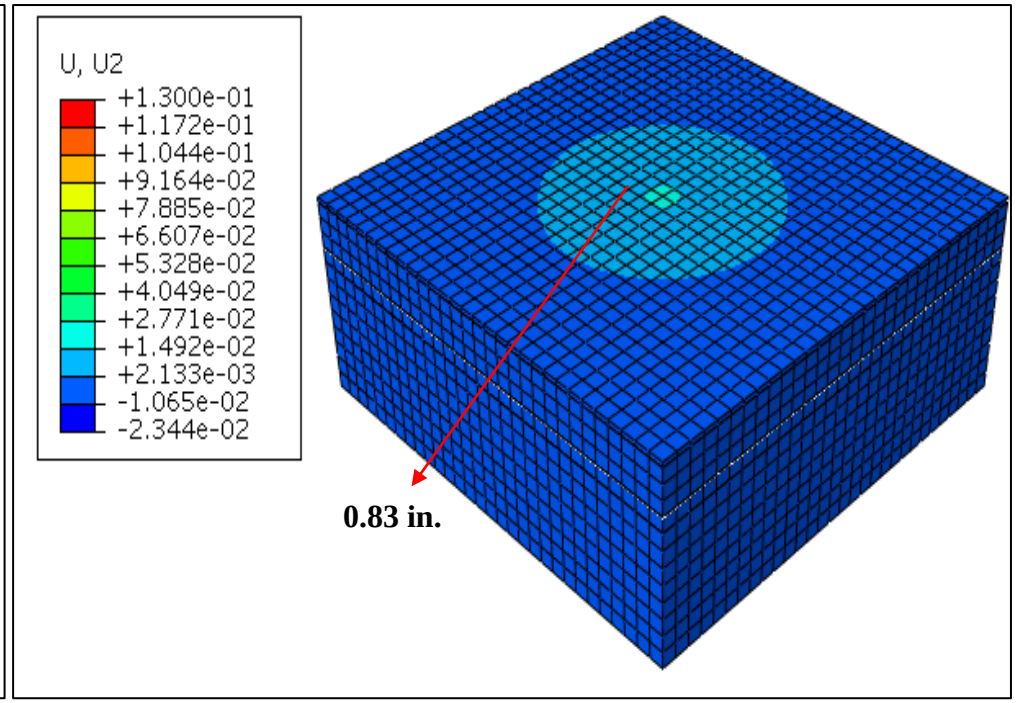

Section 2
AH-12

DIFFERENT PAVEMENT CONFIGURATIONS INCORPORATING GEOCELLS

Notation	**# of Layers**	**Placement**	Symbol
GC-1	1	Between Lime stabilized soil and Base layers	
GC-2	1	Between HMA and Base layers	
GC-3	2	One layer at the bottom of base layer and one layer in the middle of base layer	
GC-4	2	Both layers stacked on top of one another and placed between Base and Lime stabilized soil layers	
GC-5	2	One layer between HMA and Base and One layer between Base and Lime stabilized soil layers	
GC-6	2	Both layers stacked on top of one another and placed between Base and Lime stabilized soil layers	

DISPLACEMENT CONTOURS FOR GC CONFIGURATIONS

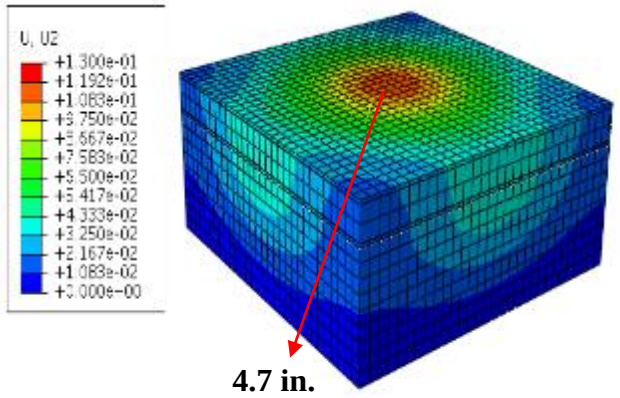

GC-1

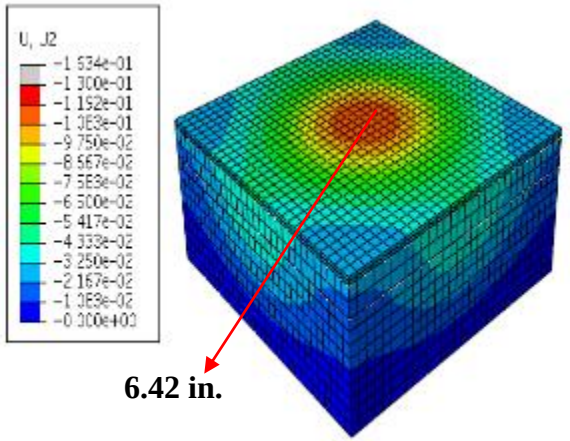

GC-2

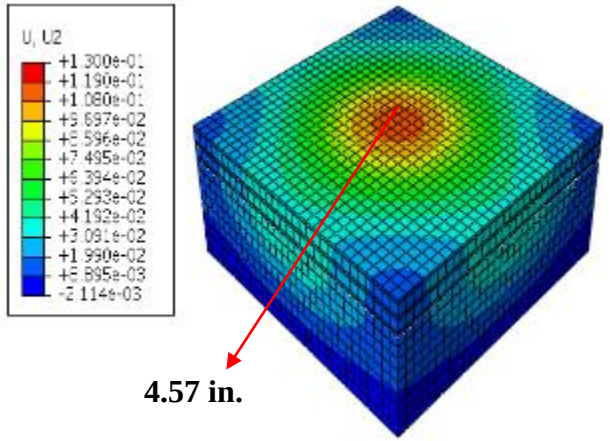

GC-3

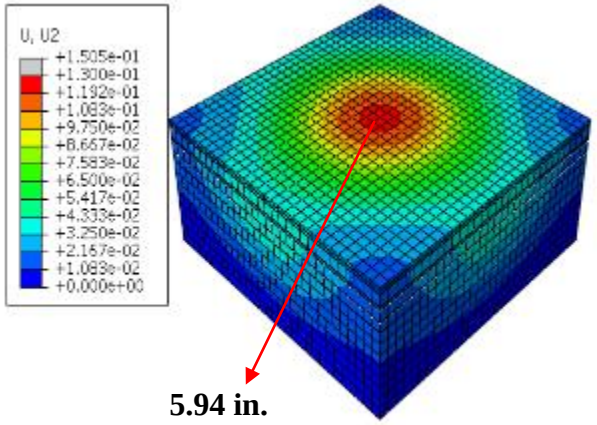

GC-4

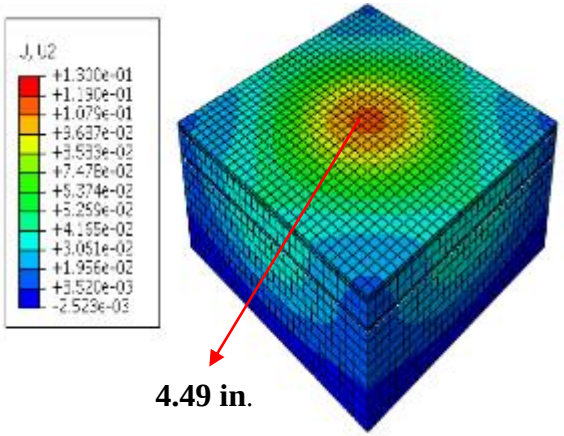

GC-5

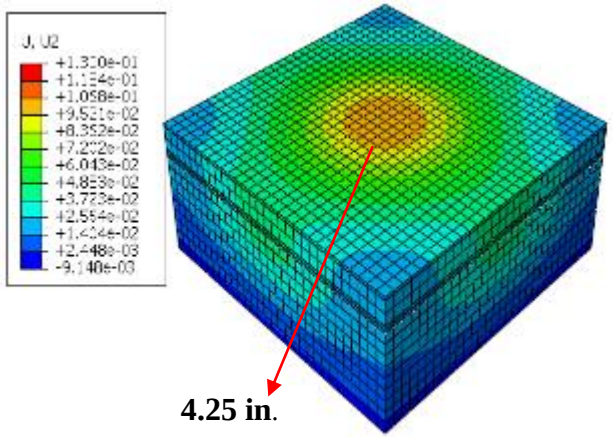

GC-6

EFFECT OF GEOCELL REINFORCEMENT ON PAVEMENT SECTION BEHAVIOR

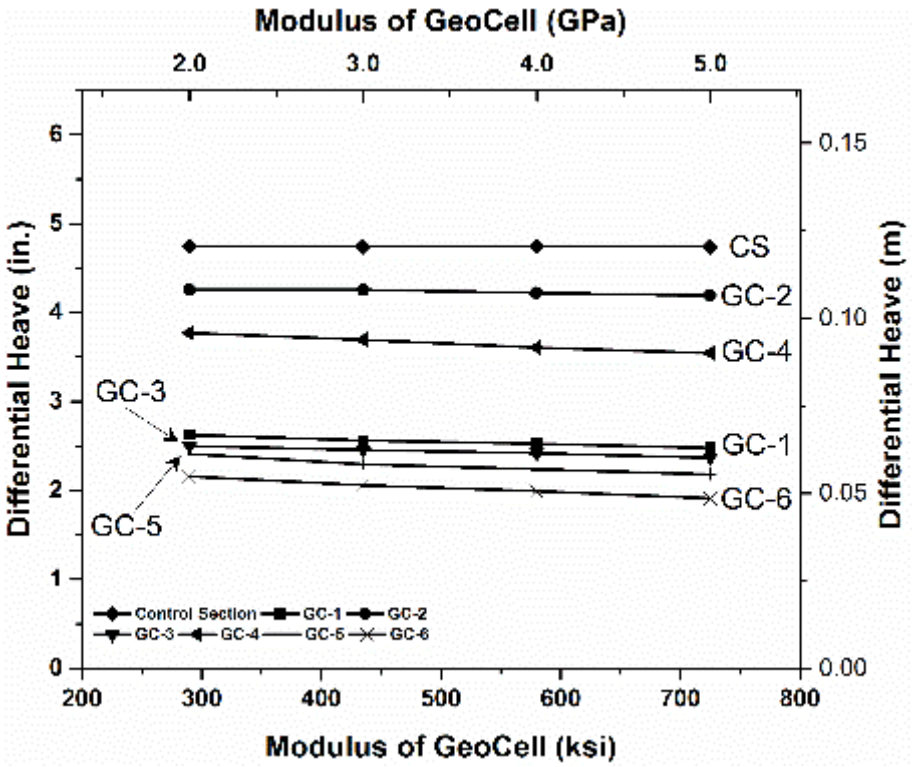

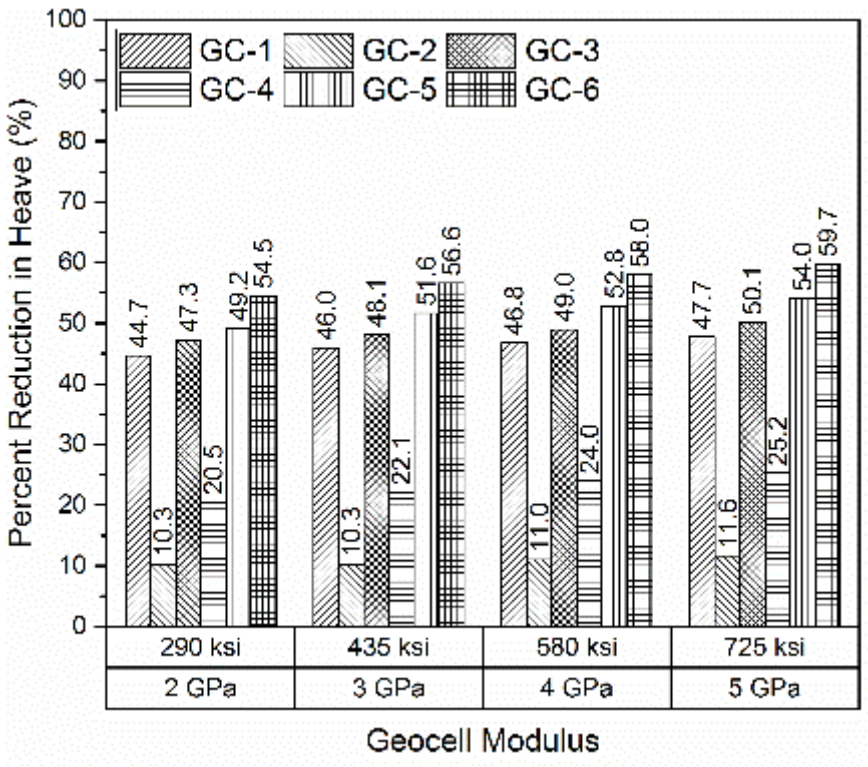

GEOGRID CONFIGURATIONS

Notation	**# of Layers**	**Placement**	Symbol
GG-1	1	Between Lime stabilized soil and Base layers	
GG-2	1	Between HMA and Base layers	
GG-3	2	Both layers stacked on top of one another and placed between Base and Lime stabilized soil layers	
GG-4	2	Both layers stacked on top of one another and placed between HMA and Base layers	
GG-5	2	One layer between HMA and Base and One layer between Base and Lime stabilized soil layers	
GG-6	2	Both layers stacked on bottom of one another and placed between Base and Lime stabilized soil layers	

DISPLACEMENT CONTOURS FOR GG CONFIGURATIONS

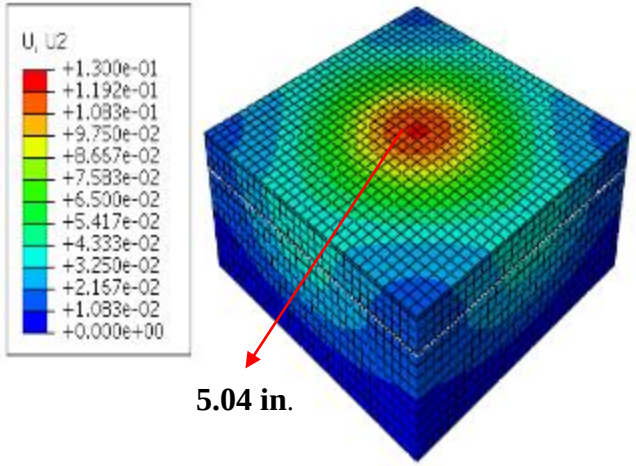

GG-1

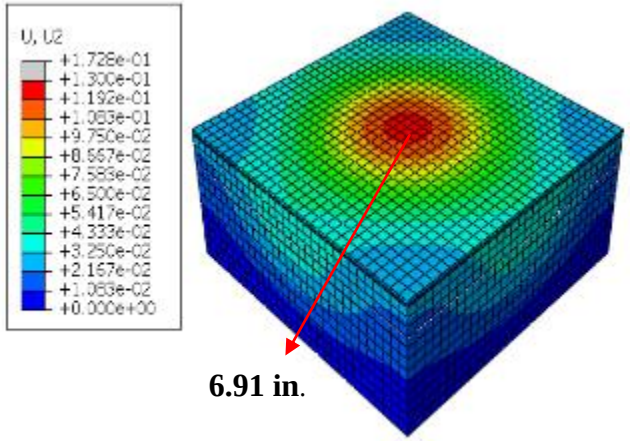

GG-2

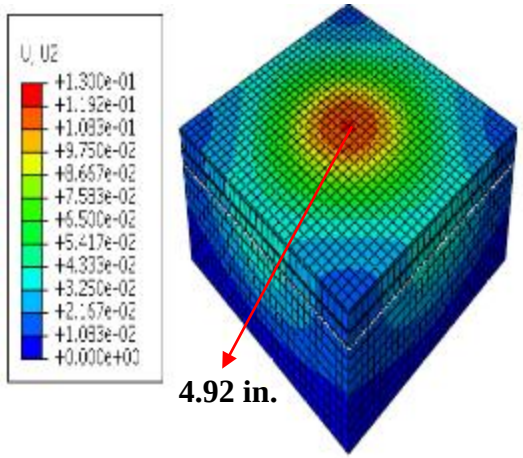

GG-3

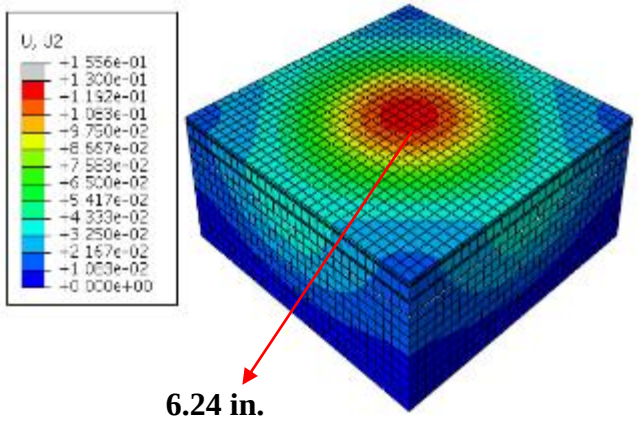

GG-4

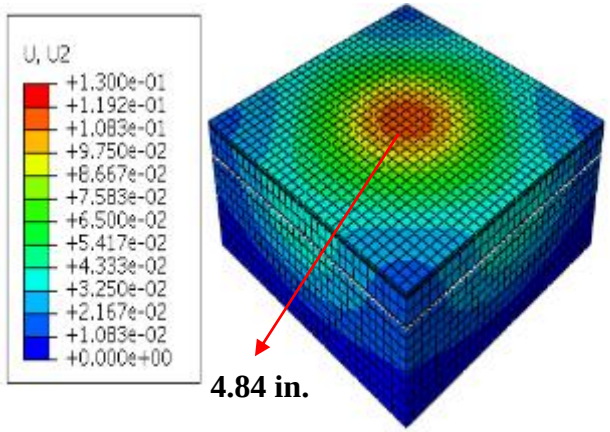

GG-5

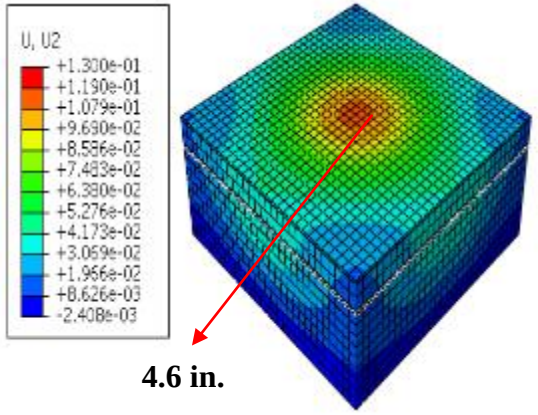

GG-6

EFFECT OF GEOGRID REINFORCEMENT ON PAVEMENT SECTION BEHAVIOR

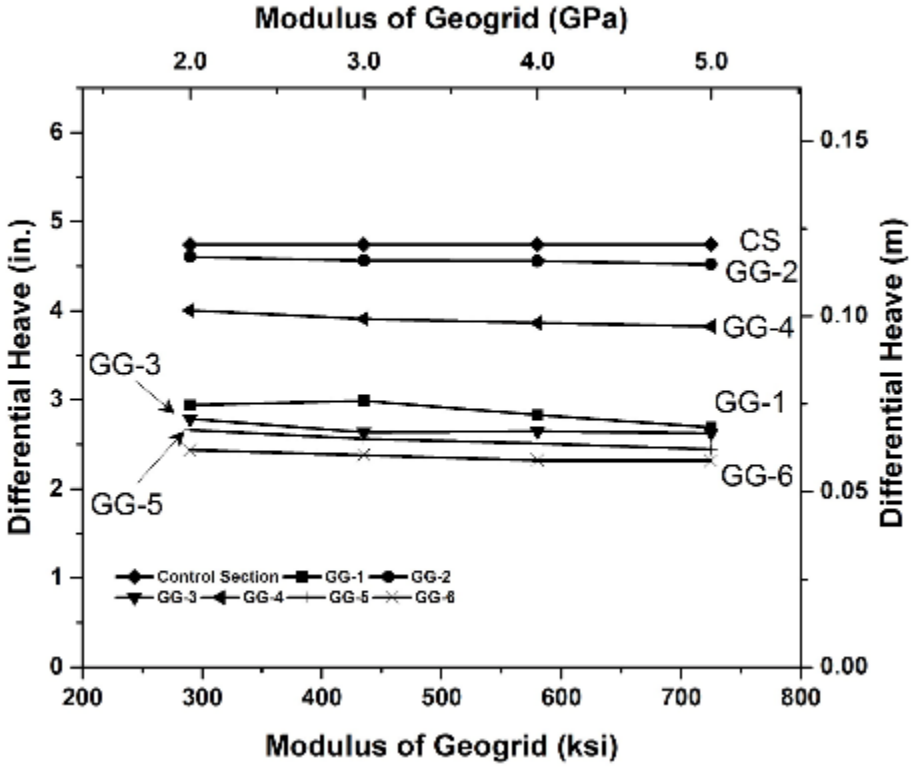

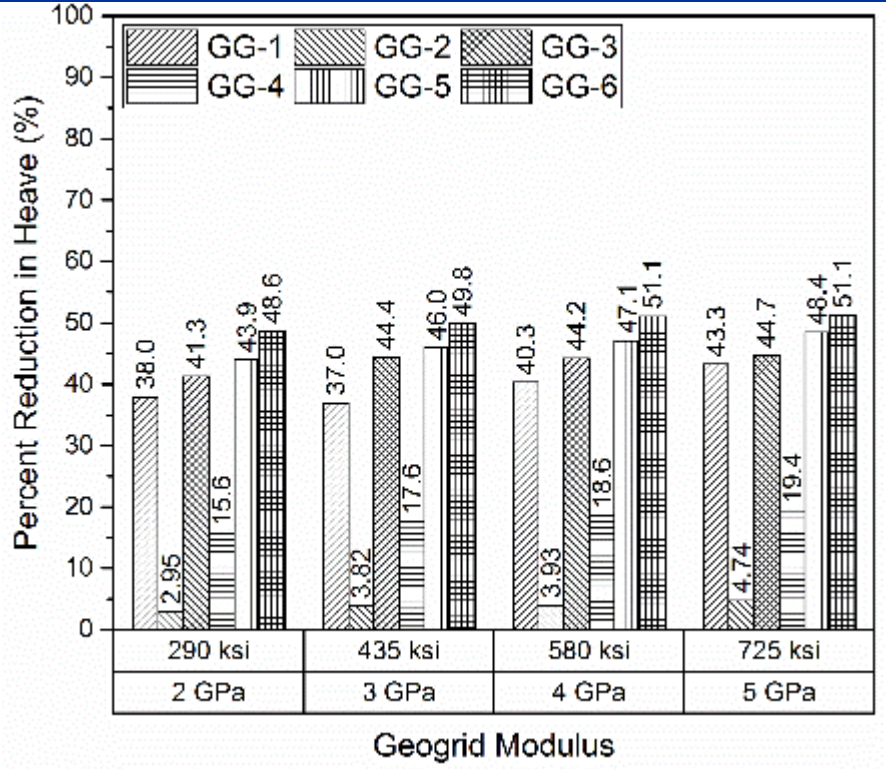

HYBRID CONFIGURATIONS

Notation	# of Layers	Placement	Symbol
HB-1	One GC, One GG	Both layers stacked on top of one another and placed between Base and Lime Stabilized Soil layers	
HB-2	Two GC, One GG	Three layers stacked on top of one another and placed between Base and Lime Stabilized Soil layers	
HB-3	Two GC, One GG	Two geocell layers stacked on top of one another and placed between HMA and Base layers and One geogrid layer between Base and Lime Stabilized Soil	
HB-4	One GC, One GG	One geogrid layer placed on Lime Stabilized Soil and one geocell layer placed below HMA	
HB-5	Two GG, Geotextile Wrapped	Two geogrid layers placed between Base and Lime Stabilized Soil and 2 ft. Geotextile Wrapped inside the Base layer from Lime Stabilized Soil	
HB-6	Two GG, Geotextile Wrapped	Two geogrid layers placed between Base and Lime Stabilized Soil and 3 ft. Geotextile Wrapped inside the Base layer from Lime Stabilized Soil	

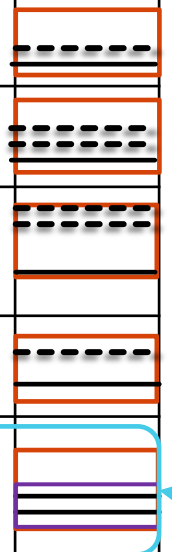

Initial DA-1

DISPLACEMENT CONTOURS FOR HB CONFIGURATIONS

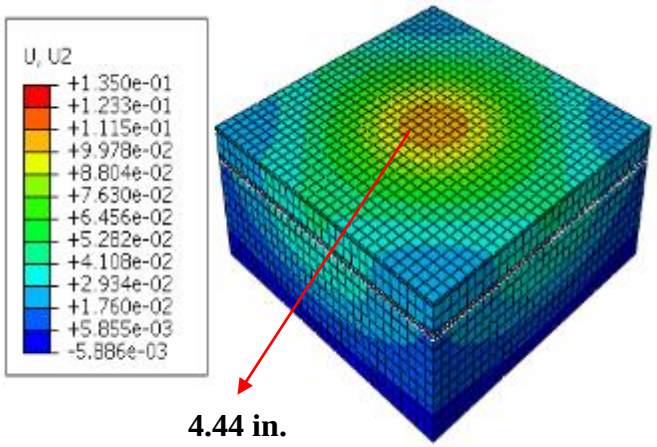

HB-1

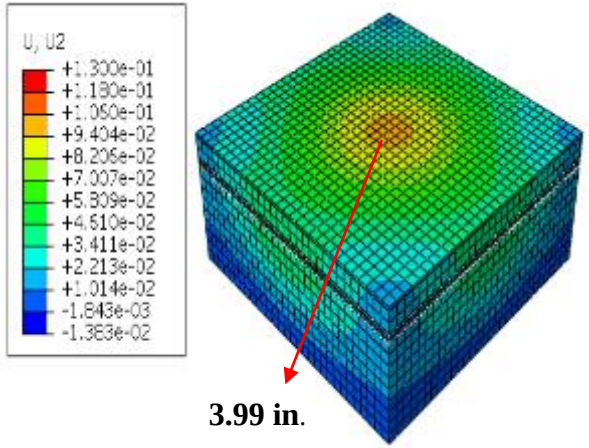

HB-2

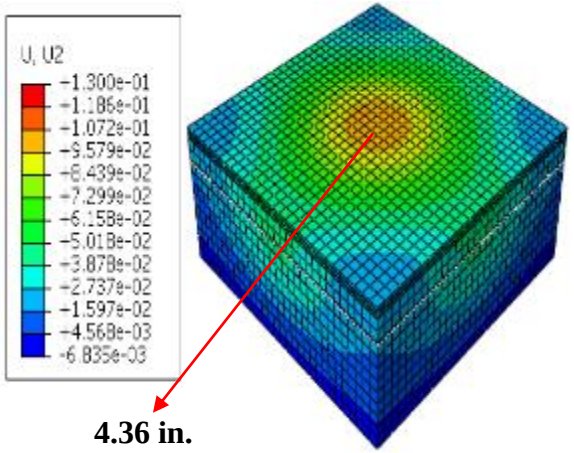

HB-3

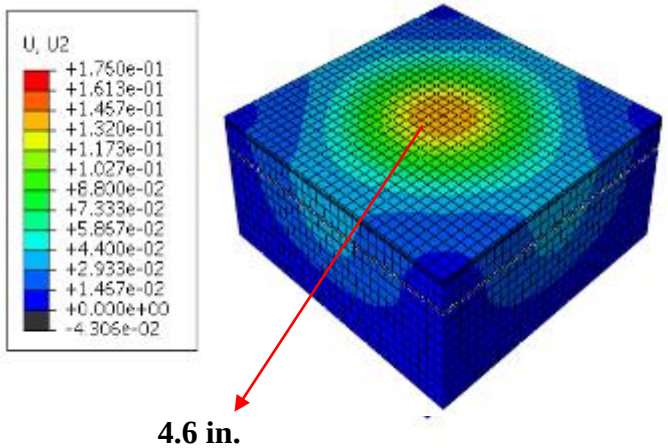

HB-4

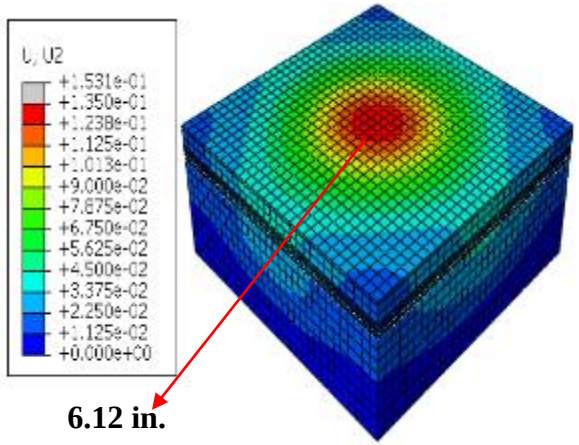

HB-5

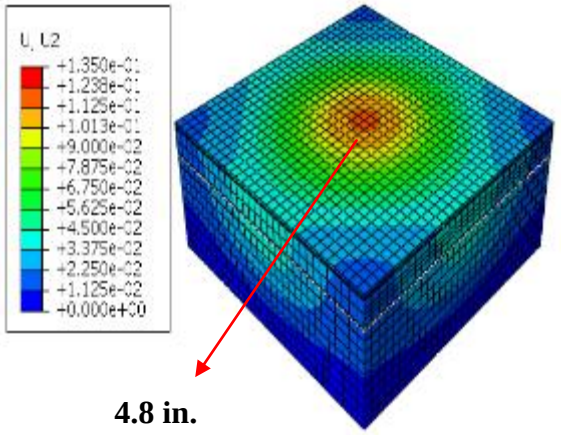

HB-6

EFFECT OF HYBRID CONFIGURATIONS ON PAVEMENT SECTION BEHAVIOR

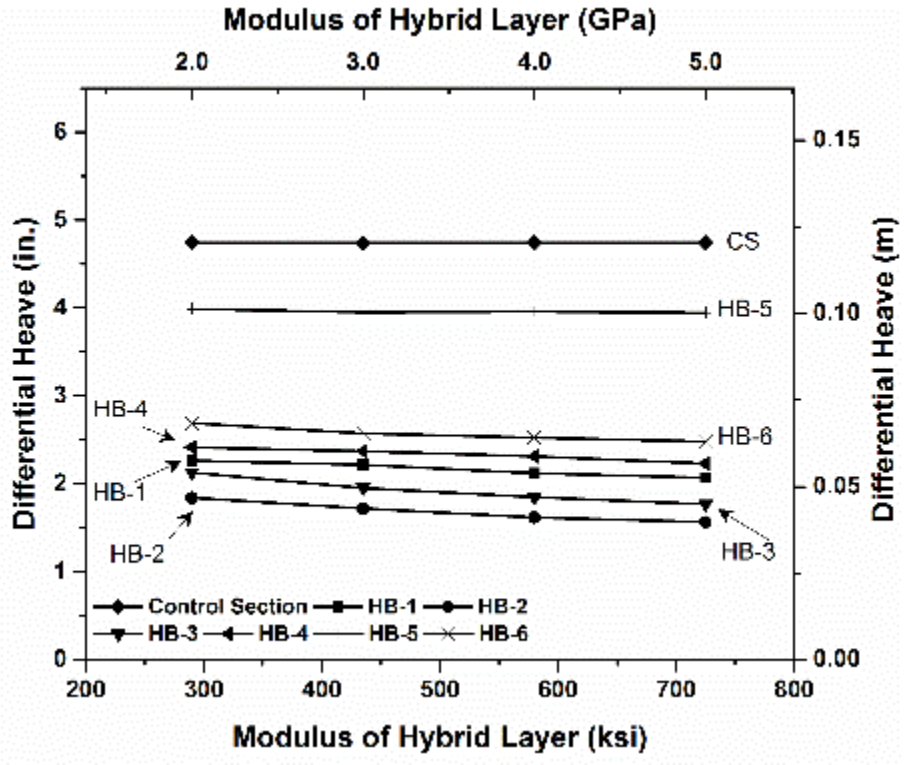

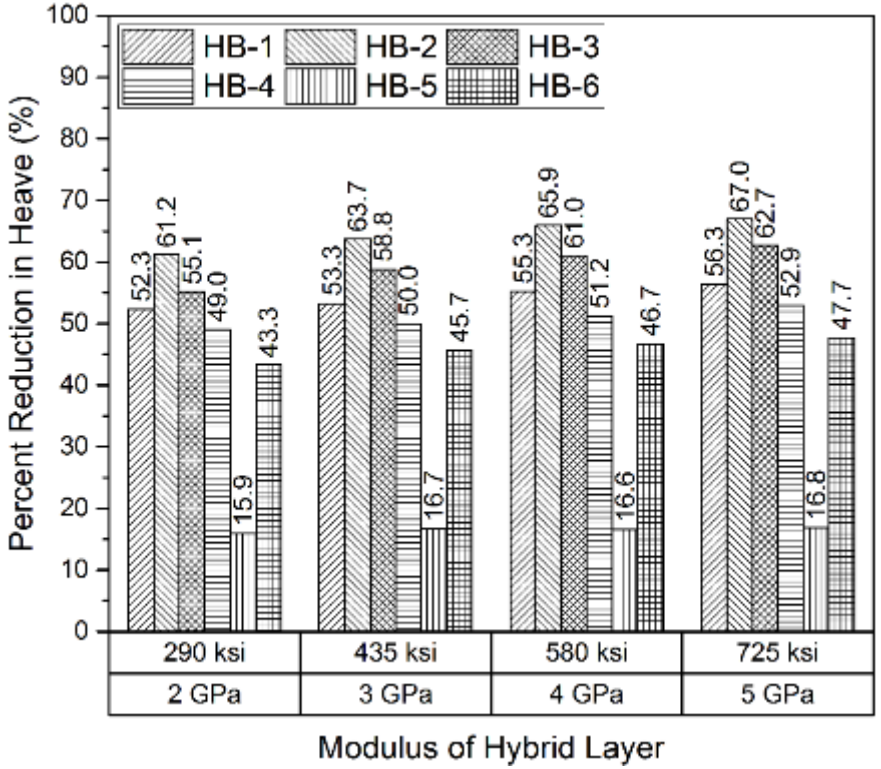

OVERALL SUMMARY OF FINDINGS

- Geocells were most effective in reducing differential heaving
- Using geogrids in conjunction with geocells was minimally effective
  - Percentage reduction improved by approximately 10%
  - Could be justified based on cost-benefit analysis
- The use of geotextile wrapping (HB-5 and HB-6) may not be effective in reducing differential heaving

RECOMMENDATIONS FROM PHASE 2 STUDY

- Numerical analysis showed GC-1, GG-1 and HB-1 to be effective performing DAs
  - Need laboratory or field corroboration
  - Perform cost/benefit analysis to justify the use of double layers or hybrid combinations
- Perform large-scale laboratory studies or full-scale field studies to evaluate best-performing alternatives further
  - Will provide insights into working with Geocells
  - Helps in writing specifications
  - Build confidence in recommended design alternative

PROJECT TYPICAL SECTION

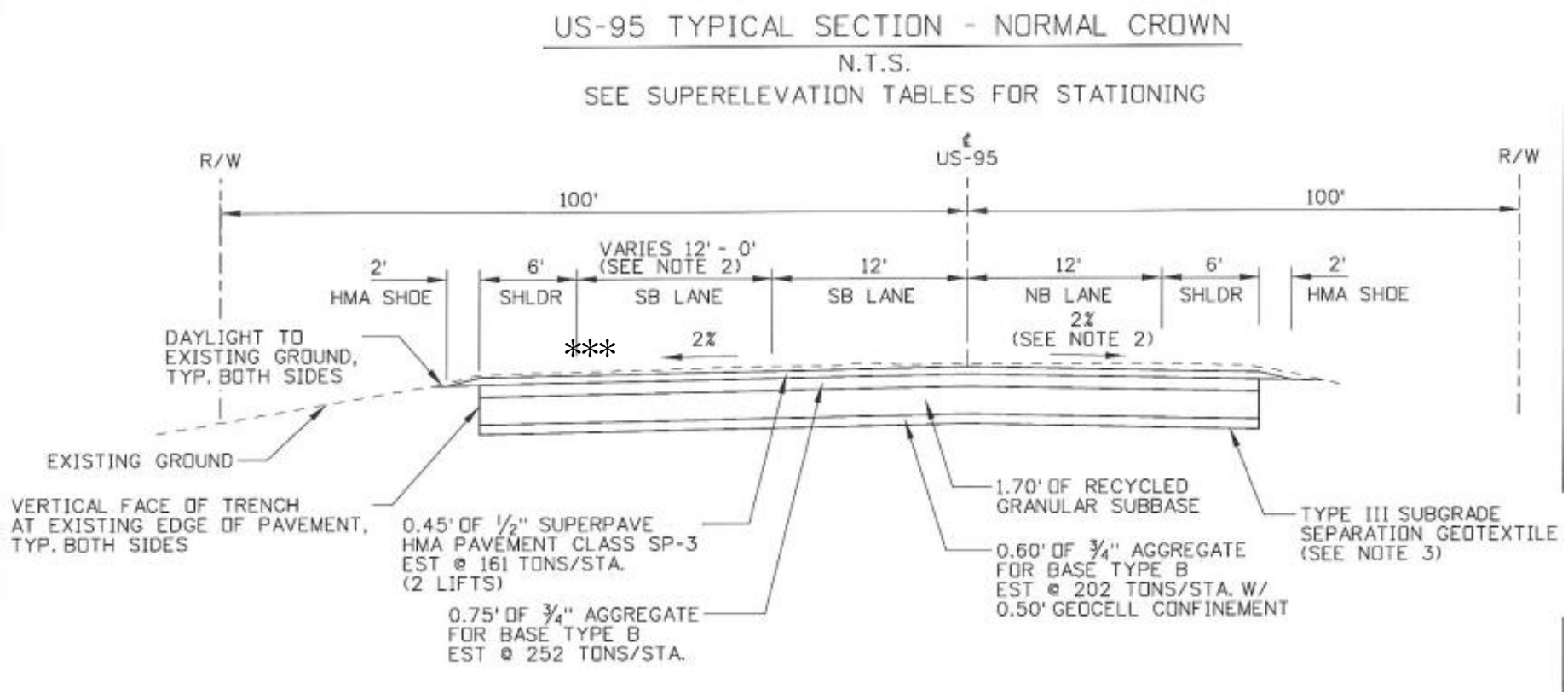

***Note: Lime-stabilized subgrade material remains intact under the structural section

SUMMARY

- Completed reconstruction in Dec 2019
- Currently being monitored
- No issues so far!

Source: Mike Van Lydegraf

ACKNOWLEDGMENTS

- Idaho Transportation Department
  - District 3
- Dr. Deb Mishra
  - Associate Professor, Oklahoma State University
- Mr. Keith Nottingham
- Graduate students
  - Sikha, Tamim, Kazi

THANK YOU!